Date: Thursday, 19/03/2009 11:05:58 AM
User: Julie Dawson

Process Sheet

Customer : CU-DAR001 Dart Helicopters Services
Job Number : 46587
Estimate Number : 11876
P.O. Number :
This Issue : 19/03/2009 **S.O. No.** :
Prsht Rev. : NC
First Issue : / / **Type** : MACHINED PARTS
Previous Run : 42497
Written By :
Checked & Approved By : JLD 09.03.19
Comment : est rev. A 06.01.14 new issue EC
est rev B 07.03.23 revB dwg EC
Est Rev:C 07-12-10 rev C dwg DD verified by:EC

Drawing Name : LEFT ARM WELDMENT
Part Number : D33547
Drawing Number : D3354 REV C
Project Number : N/A
Drawing Revision : C
Material :
Due Date : 02/04/2009 **Qty:** 4 **Um:** Each

Additional Product

Job Number:

Seq. #:	Machine Or Operation:	Description :
1.0	M1010B1000X02000	1010-1025 Steel Bar 1.00 x 2.00
	Comment: Qty.: 0.5597 f(s)/Unit Total : 2.2386 f(s) 1010-1025 BAR AISI 1010-1025 Steel bar 2.00" x 1.00" Batch: M107436	J.L 09/03/21
2.0	BAND SAW	BAND SAW
	Comment: BAND SAW Cut blanks 6.100" long	J.L 09/03/21
3.0	HAAS1	HAAS CNC VERTICAL MACHINING #1
	Comment: HAAS CNC VERTICAL MACHINING #1 1-Machine as per Folio FA611 and Dwg D3353 2- Deburr	SP 09/03/21
4.0	QC2	INSPECT PARTS AS THEY COME OFF MACHINE
	Comment: INSPECT PARTS AS THEY COME OFF MACHINE	SP 09/03/21
5.0	QC8	SECOND CHECK
	Comment: SECOND CHECK	J.F. 09/03/23 (4)

Dart Aerospace Ltd

W/O:		WORK ORDER CHANGES					
DATE	STEP	PROCEDURE CHANGE	By	Date	Qty	Approval Chief Eng / Prod Mgr	Approval QC Inspector

Part No: _____ **PAR #:** _____ **Fault Category:** _____ **NCR:** Yes No **DQA:** _____ **Date:** _____

Resolution: _____ **Disposition:** _____ **QA: N/C Closed:** _____ **Date:** _____

NCR:		WORK ORDER NON-CONFORMANCE (NCR)						
DATE	STEP	Description of NC Section A	Corrective Action Section B			Verification Section C	Approval Chief Eng	Approval QC Inspector
			Initial Chief Eng	Action Description Chief Eng	Sign & Date			

NOTE: Date & initial all entries

H:\fFORMS\Quality Assurance\approved QA\NCRWO RevE

Date: Thursday, 19/03/2009 11:05:58 AM
User: Julie Dawson

Process Sheet

Customer: CU-DAR001 Dart Helicopters Services **Drawing Name:** LEFT ARM WELDMENT

Job Number: 46587 **Part Number:** D33547

Job Number:

Seq. #:	Machine Or Operation:	Description :
6.0	PACKAGING 1	PACKAGING RESOURCE #1
	Comment: PACKAGING RESOURCE #1	Carl L. 09/03/24 x4
7.0	QC21	FINAL INSPECTION/W/O RELEASE
	Comment: FINAL INSPECTION/W/O RELEASE	09/03/24

Job Completion

MF 09-03-24

Form: rprocess

Dart Aerospace Ltd

W/O:		WORK ORDER CHANGES					
DATE	STEP	PROCEDURE CHANGE	By	Date	Qty	Approval Chief Eng / Prod Mgr	Approval QC Inspector

Part No: _____ PAR #: _____ Fault Category: _____ NCR: Yes No DQA: _____ Date: _____

Resolution: _____ Disposition: _____ QA: N/C Closed: _____ Date: _____

NCR:		WORK ORDER NON-CONFORMANCE (NCR)						
DATE	STEP	Description of NC Section A	Corrective Action Section B			Verification Section C	Approval Chief Eng	Approval QC Inspector
			Initial Chief Eng	Action Description Chief Eng	Sign & Date			

NOTE: Date & initial all entries

H:\fFORMS\Quality Assurance\approved QA\NCRWO RevE

DART AEROSPACE LTD	Work Order:	146587
Description: Left Arm Plate	Part Number:	D3354-7
Inspection Dwg: D3354 **Rev: C**		Page 1 of 1

FIRST ARTICLE INSPECTION CHECKLIST

[X] First Article [ ] Prototype

Drawing Dimension	Tolerance	Actual Dimension	Accept	Reject	Method of Inspection	Comments
5.35	+/-0.030	5.350	✓			
1.150	+/-0.010	1.149	✓			
2.500	+/-0.010	2.499	✓			
1.487	+/-0.010	1.487	✓			
0.200	+/-0.010	.200	✓			
0.800	+/-0.010	.800	✓			
1.000	+/-0.010	1.000	✓			
2.00	+/-0.030	2.005	✓			
0.375	+/-0.010	.375	✓			
0.500	+/-0.010	.500	✓			
Ø1.251	+0.005/-0.000	1.256	✓			
Ø0.250	+0.005/-0.001	.251	✓			
Ø1.000	+0.015/-0.000	1.007	✓			
Ø0.406	+0.006/-0.001	.406	✓			
6.00	+/-0.030	6.00	✓			
1.00	+/-0.030	1.00				

Measured by:	SP	Audited by:	J.F.	Prototype Approval:	N/A
Date:	09/03/21	Date:	09/03/23	Date:	N/A

Rev	Date	Change	Revised by	Approved
A	07.12.10	New Issue	KJ/EC/DD	

DESIGN	DRAWN BY	DART AEROSPACE LTD HAWKESBURY, ONTARIO, CANADA
CHECKED	APPROVED	DRAWING NO. LEFT ARM WELDMENT — REV. C — SHEET 1 OF 7
DATE 07.12.06		TITLE D3354 — SCALE 1:4

REV	DATE	DESCRIPTION
A	04.12.13	NEW ISSUE
B	07.02.02	REVISED DIMENSIONS
C	07.12.06	CHANGE TOLERANCE ON D3354-7 LEFT ARM PLATE HOLE FOR D3354-3 WHEEL SHAFT

RELEASED 07.12.07

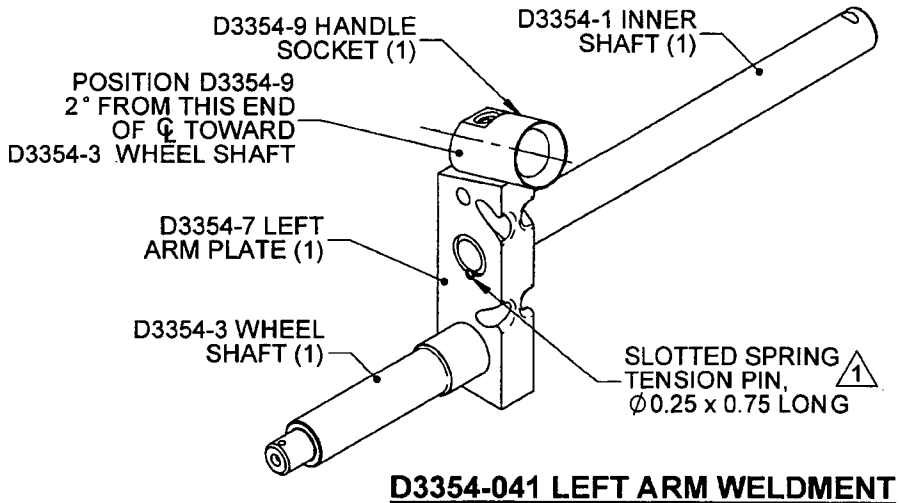

D3354-041 LEFT ARM WELDMENT

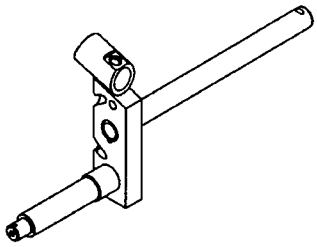

D3354-042 MIRROR ARM WELDMENT

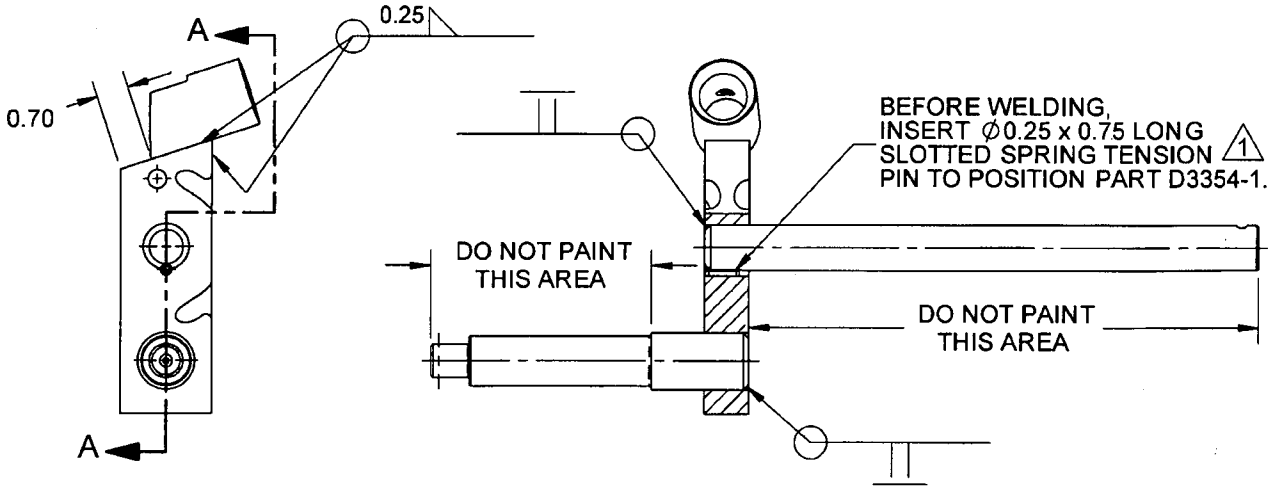

SECTION A-A

SHOP COPY
RETURN TO ENGINEERING
UNCONTROLLED COPY
SUBJECT TO AMENDMENT WITHOUT NOTICE
WORK ORDER NO 66587

NOTES:

1) POSSIBLE SUPPLIER: SPAENAUR, P/N TP-134
2) WELD PER DART QSI 004
3) FINISH: POWDER COAT PAINT FIRE RED (4.3.5.10) PER DART QSI 005 4.3
4) TOLERANCES ARE PER DART QSI 018 UNLESS OTHERWISE NOTED
5) ALL DIMENSIONS ARE IN INCHES
6) BREAK ALL SHARP EDGES 0.010 TO 0.020

COPYRIGHT © 2004 BY DART AEROSPACE LTD

THIS DOCUMENT IS PRIVATE AND CONFIDENTIAL AND IS SUPPLIED ON THE EXPRESS CONDITION THAT IT IS NOT TO BE USED FOR ANY PURPOSE OR COPIED OR COMMUNICATED TO ANY OTHER PERSON WITHOUT WRITTEN PERMISSION FROM DART AEROSPACE LTD.

DESIGN	DRAWN BY	DART AEROSPACE LTD HAWKESBURY, ONTARIO, CANADA	
CHECKED	APPROVED	DRAWING NO. D3354	REV. C SHEET 2 OF 7
DATE 07.12.06		TITLE LEFT ARM WELDMENT	SCALE 1:2

RELEASED 07/12/07

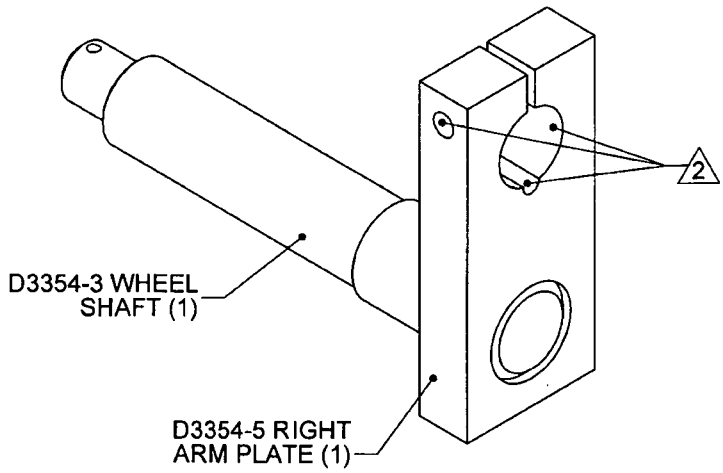

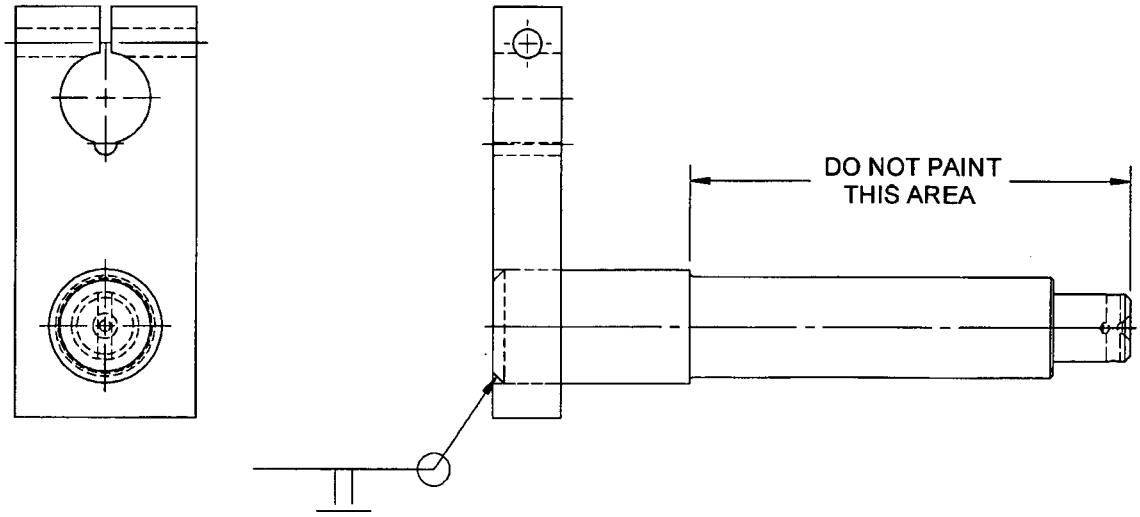

D3354-043 RIGHT ARM WELDMENT

SHOP COPY
RETURN TO
ENGINEERING
UNCONTROLLED COPY
SUBJECT TO AMENDMENT
WITHOUT NOTICE
WORK ORDER
NO. 46587

NOTES:

1) WELD PER DART QSI 004
2) COVER INSIDE HOLES PRIOR PAINTING
3) FINISH: POWDER COAT PAINT FIRE RED (4.3.5.10) PER DART QSI 005 4.3
4) TOLERANCES ARE PER DART QSI 018 UNLESS OTHERWISE NOTED
5) ALL DIMENSIONS ARE IN INCHES
6) BREAK ALL SHARP EDGES 0.010 TO 0.020

COPYRIGHT © 2004 BY DART AEROSPACE LTD

THIS DOCUMENT IS PRIVATE AND CONFIDENTIAL AND IS SUPPLIED ON THE EXPRESS CONDITION THAT IT IS NOT TO BE USED FOR ANY PURPOSE OR COPIED OR COMMUNICATED TO ANY OTHER PERSON WITHOUT WRITTEN PERMISSION FROM DART AEROSPACE LTD.

DESIGN	DRAWN BY	DART AEROSPACE LTD HAWKESBURY, ONTARIO, CANADA	
CHECKED	APPROVED	DRAWING NO. D3354	REV. C SHEET 3 OF 7
DATE 07.12.06		TITLE LEFT ARM WELDMENT	SCALE 1:2

RELEASED 07/12/07

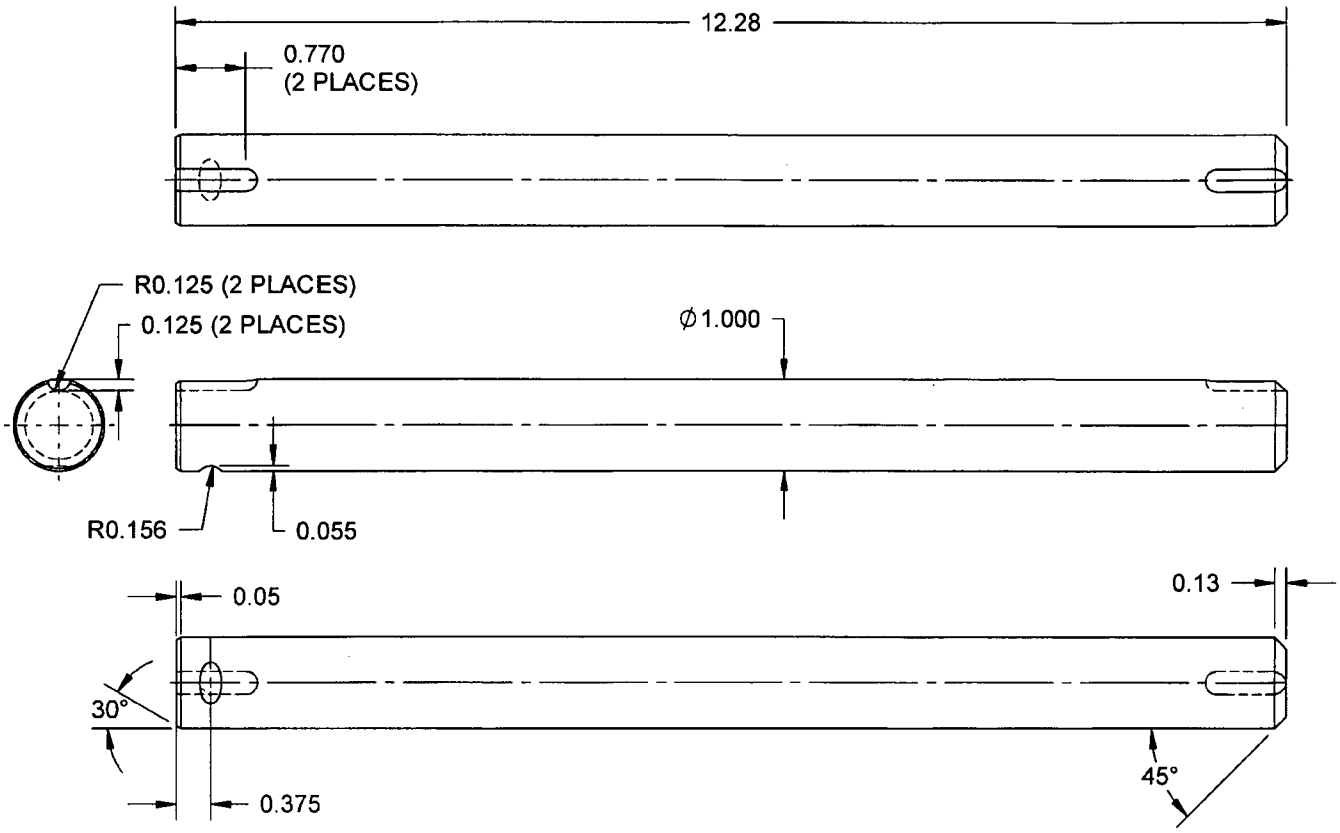

D3354-1 INNER SHAFT

NOTES:

1) MATERIAL: AISI-4140 OR ASTM A304-02/ A-434-BC / A193-03 - GRADE-B7/ A29-03/ A322-91 OR UNS#-G41400 ROUND BAR, Ø1.250 (REF. DART SPEC. M4140H-R)
2) TOLERANCES ARE PER DART QSI 018 UNLESS OTHERWISE NOTED
3) ALL DIMENSIONS ARE IN INCHES
4) BREAK ALL SHARP EDGES 0.005 TO 0.010

SHOP COPY
RETURN TO
ENGINEERING
UNCONTROLLED COPY
SUBJECT TO AMENDMENT
WITHOUT NOTICE
WORK ORDER
NO. 48587

COPYRIGHT © 2004 BY DART AEROSPACE LTD

THIS DOCUMENT IS PRIVATE AND CONFIDENTIAL AND IS SUPPLIED ON THE EXPRESS CONDITION THAT IT IS NOT TO BE USED FOR ANY PURPOSE OR COPIED OR COMMUNICATED TO ANY OTHER PERSON WITHOUT WRITTEN PERMISSION FROM DART AEROSPACE LTD.

DESIGN	DRAWN BY	DART AEROSPACE LTD HAWKESBURY, ONTARIO, CANADA	
CHECKED	APPROVED	DRAWING NO. D3354	REV. C SHEET 4 OF 7
DATE 07.12.06		TITLE LEFT ARM WELDMENT	SCALE 1:1

RELEASED 07.12.07

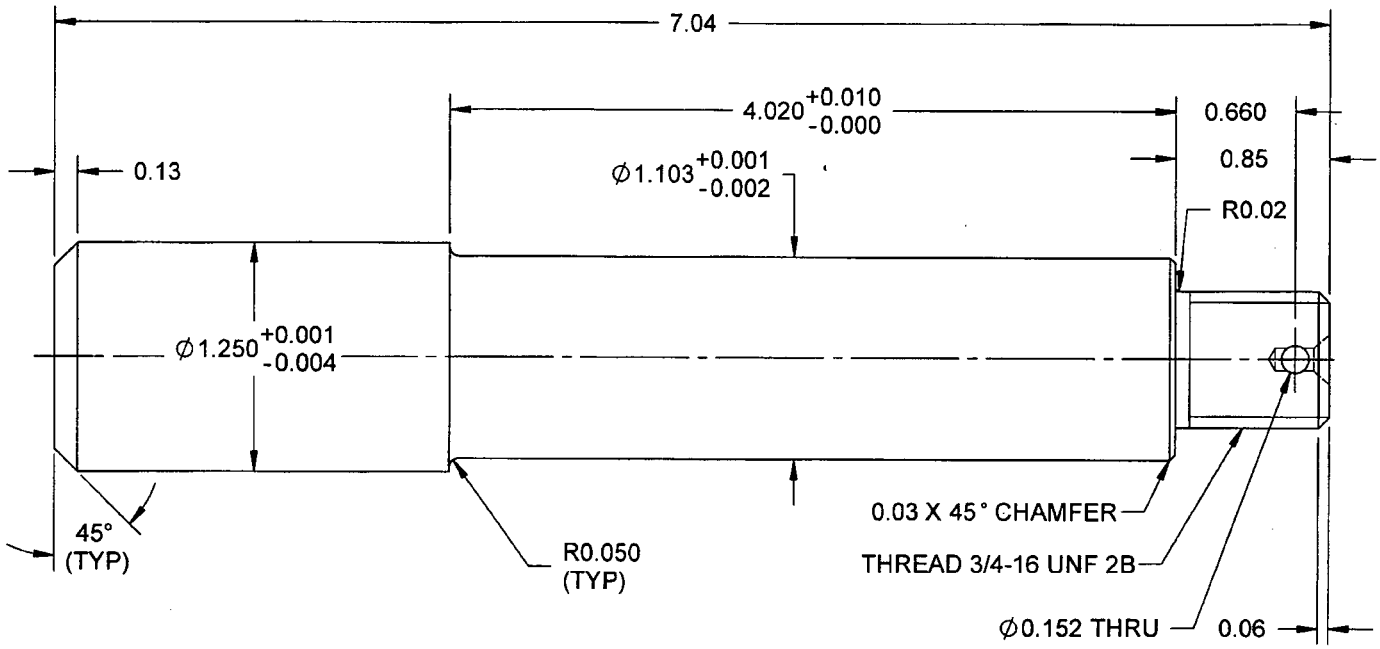

D3354-3 WHEEL SHAFT

SHOP COPY
RETURN TO
ENGINEERING
UNCONTROLLED COPY
SUBJECT TO CHANGE
WITHOUT NOTICE
WORK ORDER
NO. 46587

NOTES:

1) MATERIAL: AISI-4130/ AISI-4140 OR ASTM A304-02/ A-434-BC / A193-03 - GRADE-B7/ A29-03/ A322-91 OR UNS#-G41400 ROUND BAR, Ø1.250 (REF. DART SPEC. M4140H-R)
2) TOLERANCES ARE PER DART QSI 018 UNLESS OTHERWISE NOTED
3) ALL DIMENSIONS ARE IN INCHES
4) BREAK ALL SHARP EDGES 0.010 TO 0.020

COPYRIGHT © 2004 BY DART AEROSPACE LTD

THIS DOCUMENT IS PRIVATE AND CONFIDENTIAL AND IS SUPPLIED ON THE EXPRESS CONDITION THAT IT IS NOT TO BE USED FOR ANY PURPOSE OR COPIED OR COMMUNICATED TO ANY OTHER PERSON WITHOUT WRITTEN PERMISSION FROM DART AEROSPACE LTD.

DESIGN	DRAWN BY	DART AEROSPACE LTD HAWKESBURY, ONTARIO, CANADA	
CHECKED	APPROVED	DRAWING NO. D3354	REV. C SHEET 5 OF 7
DATE 07.12.06		TITLE LEFT ARM WELDMENT	SCALE 1:1

RELEASED 07/12/07

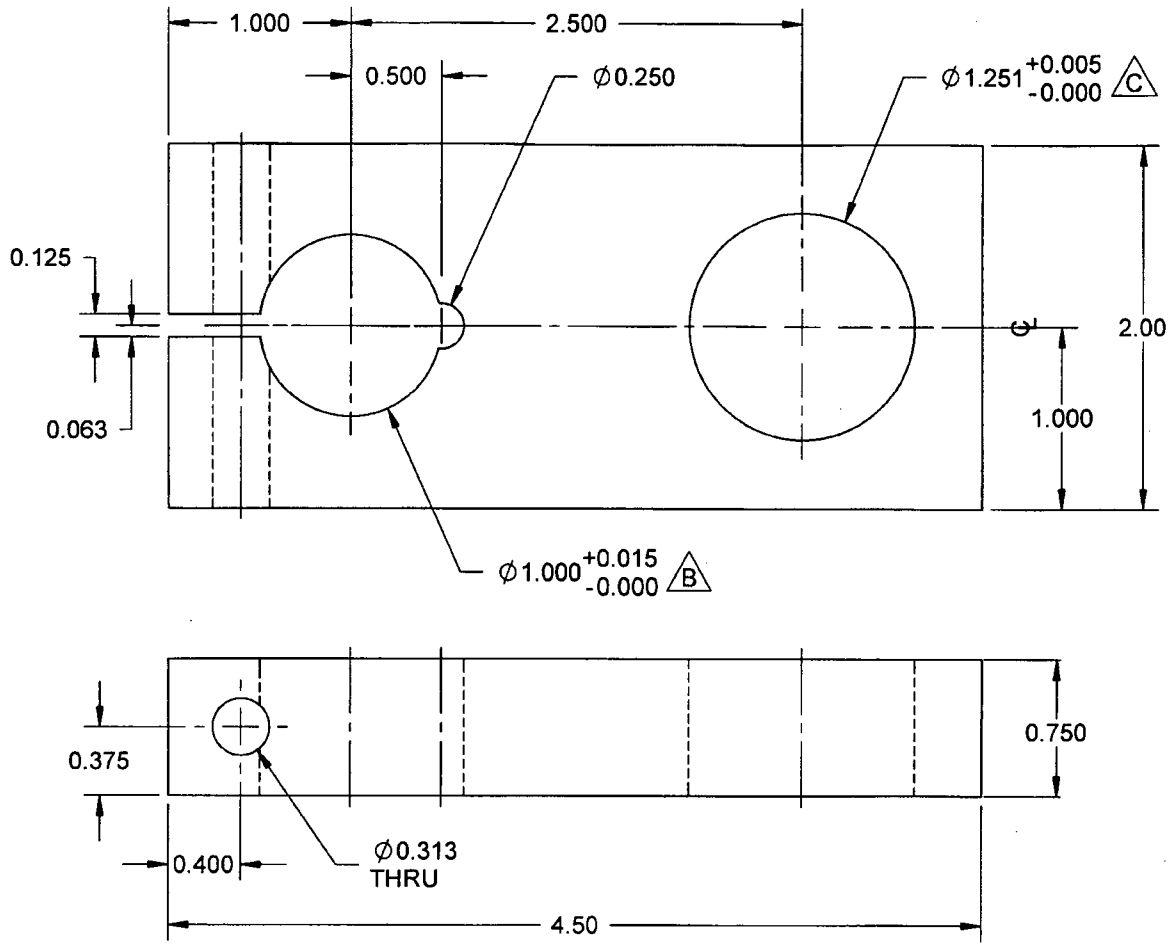

D3354-5 RIGHT ARM PLATE

SHOP COPY
RETURN TO
ENGINEERING
UNCONTROLLED COPY
SUBJECT TO AMENDMENT
WITHOUT NOTICE
WORK ORDER
NO. 46587

NOTES:

1) MATERIAL: AISI 1010-1025 OR ASTM A36/A366/A569/A570 OR CSA G40.21, 38W/44W/50W/60W/70W, 0.75 THICK MILD STEEL BAR (REF. DART SPEC. M1010-B)
2) TOLERANCES ARE PER DART QSI 018 UNLESS OTHERWISE NOTED
3) ALL DIMENSIONS ARE IN INCHES
4) BREAK ALL SHARP EDGES 0.010 TO 0.020

COPYRIGHT © 2004 BY DART AEROSPACE LTD

THIS DOCUMENT IS PRIVATE AND CONFIDENTIAL AND IS SUPPLIED ON THE EXPRESS CONDITION THAT IT IS NOT TO BE USED FOR ANY PURPOSE OR COPIED OR COMMUNICATED TO ANY OTHER PERSON WITHOUT WRITTEN PERMISSION FROM DART AEROSPACE LTD.

DESIGN	DRAWN BY	DART AEROSPACE LTD HAWKESBURY, ONTARIO, CANADA	
CHECKED	APPROVED	DRAWING NO. D3354	REV. C SHEET 6 OF 7
DATE 07.12.06		TITLE LEFT ARM WELDMENT	SCALE 1:2

RELEASED 07.12.07

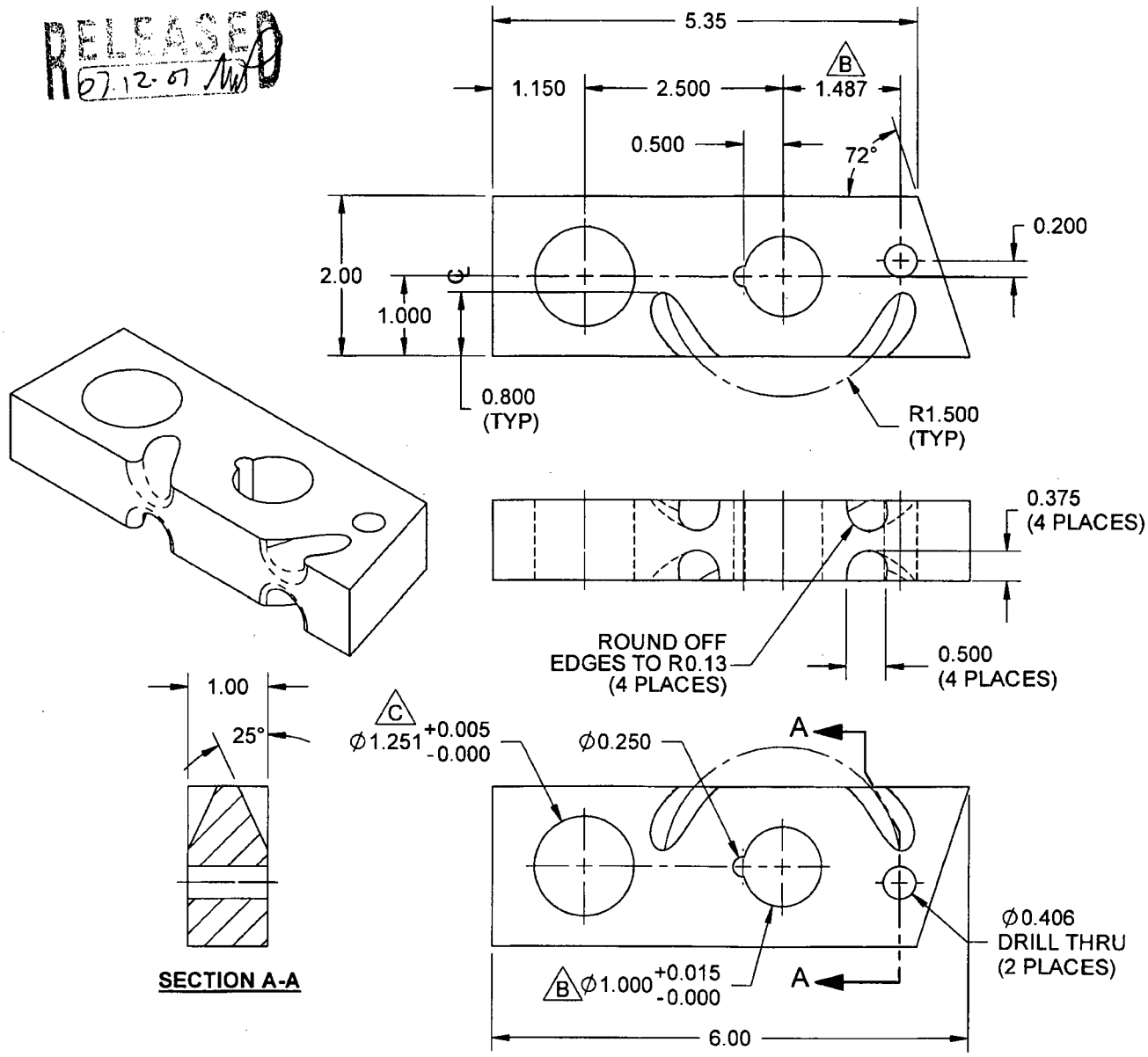

D3354-7 LEFT ARM PLATE

NOTES:

1) MATERIAL: AISI 1010-1025 OR ASTM A36/A366/A569/A570 OR CSA G40.21, 38W/44W/50W/60W/70W, 1.00 THICK MILD STEEL BAR (REF. DART SPEC. M1010-B)
2) TOLERANCES ARE PER DART QSI 018 UNLESS OTHERWISE NOTED
3) ALL DIMENSIONS ARE IN INCHES
4) BREAK ALL SHARP EDGES 0.010 TO 0.020

SHOP COPY
RETURN TO
ENGINEERING
UNCONTROLLED COPY
SUBJECT TO AMENDMENT
WITHOUT NOTICE
WORK ORDER
NO. 46587

COPYRIGHT © 2004 BY DART AEROSPACE LTD

THIS DOCUMENT IS PRIVATE AND CONFIDENTIAL AND IS SUPPLIED ON THE EXPRESS CONDITION THAT IT IS NOT TO BE USED FOR ANY PURPOSE OR COPIED OR COMMUNICATED TO ANY OTHER PERSON WITHOUT WRITTEN PERMISSION FROM DART AEROSPACE LTD.

DESIGN	DRAWN BY	DART AEROSPACE LTD HAWKESBURY, ONTARIO, CANADA	
CHECKED	APPROVED	DRAWING NO. D3354	REV. C SHEET 7 OF 7
DATE 07.12.06		TITLE LEFT ARM WELDMENT	SCALE 1:1

RELEASED 07.12.07

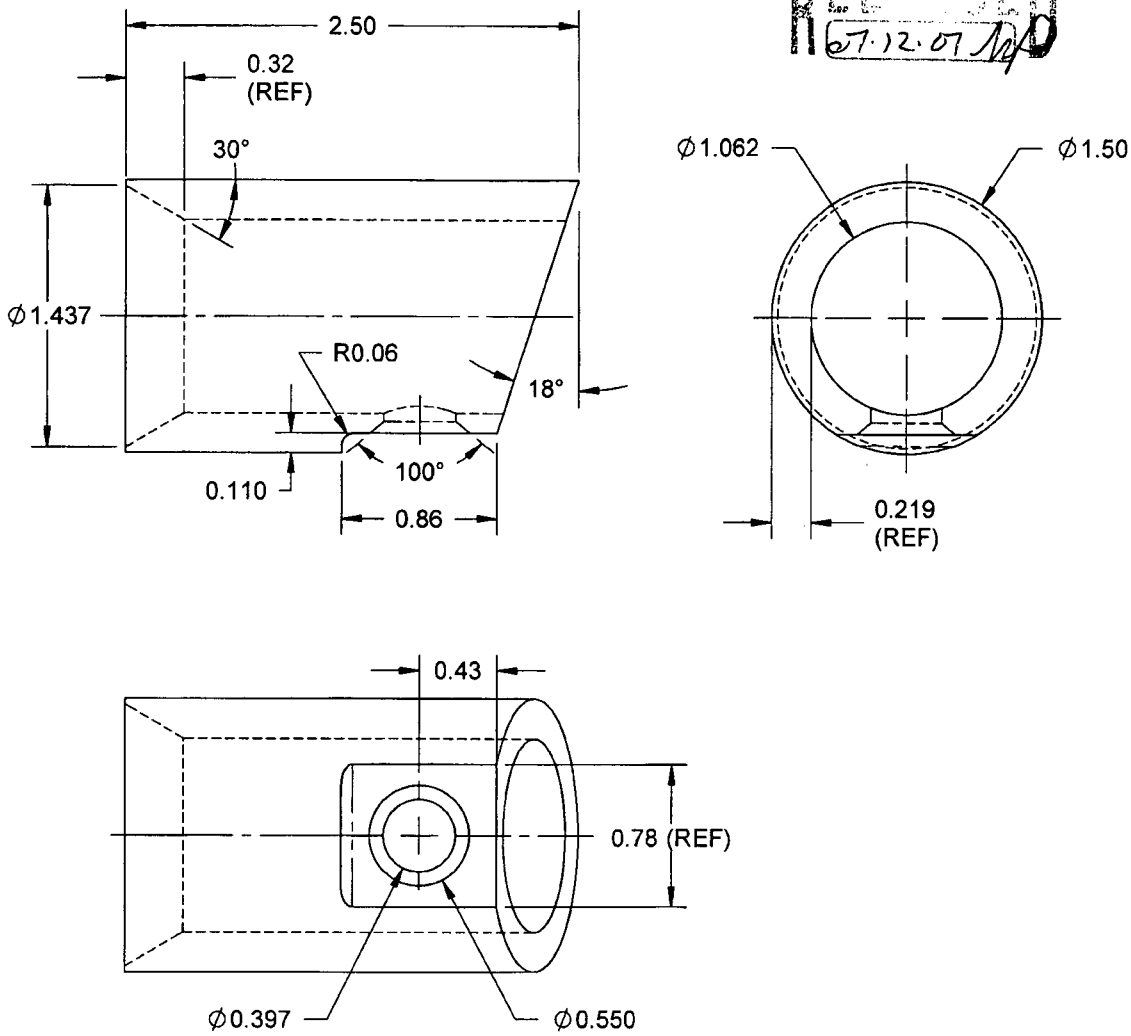

D3354-9 HANDLE SOCKET

NOTES:

1) MATERIAL: AISI 1010-1025 SEAM LESS ROUND TUBING PER MIL-T-5066 OR ASTM A513-00 MT1020 SRA OR AMS 5075 OR AMS 5077, (REF. DART SPEC. M1020TR1.250W.219)
2) TOLERANCES ARE PER DART QSI 018 UNLESS OTHERWISE NOTED
3) ALL DIMENSIONS ARE IN INCHES
4) BREAK ALL SHARP EDGES 0.010 TO 0.020

SHOP COPY
RETURN TO
ENGINEERING
UNCONTROLLED COPY
SUBJECT TO AMENDMENT
WITHOUT NOTICE
WORK ORDER
NO. 26587

COPYRIGHT © 2004 BY DART AEROSPACE LTD

THIS DOCUMENT IS PRIVATE AND CONFIDENTIAL AND IS SUPPLIED ON THE EXPRESS CONDITION THAT IT IS NOT TO BE USED FOR ANY PURPOSE OR COPIED OR COMMUNICATED TO ANY OTHER PERSON WITHOUT WRITTEN PERMISSION FROM DART AEROSPACE LTD.